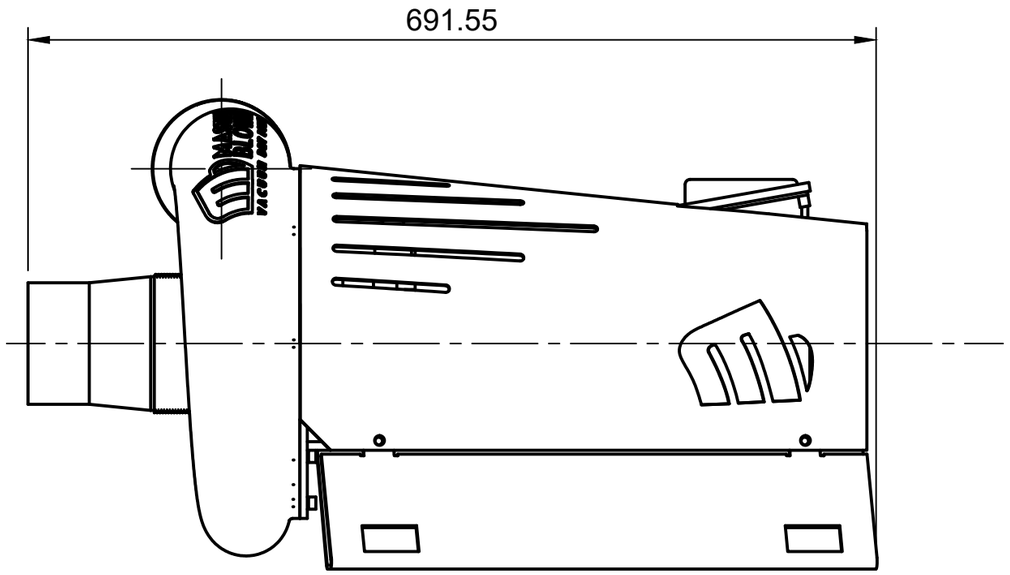
691.55

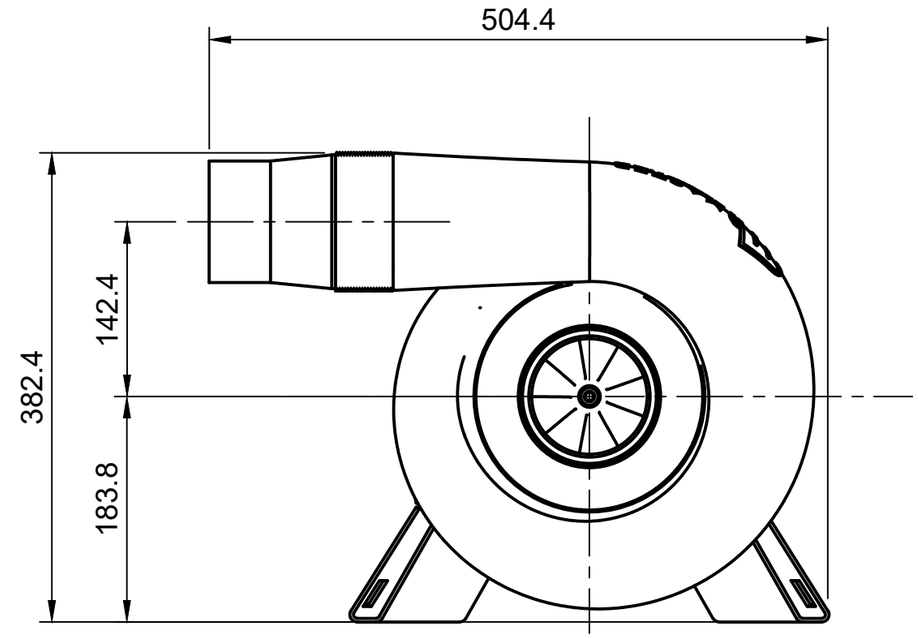
504.4
142.4
382.4
183.8

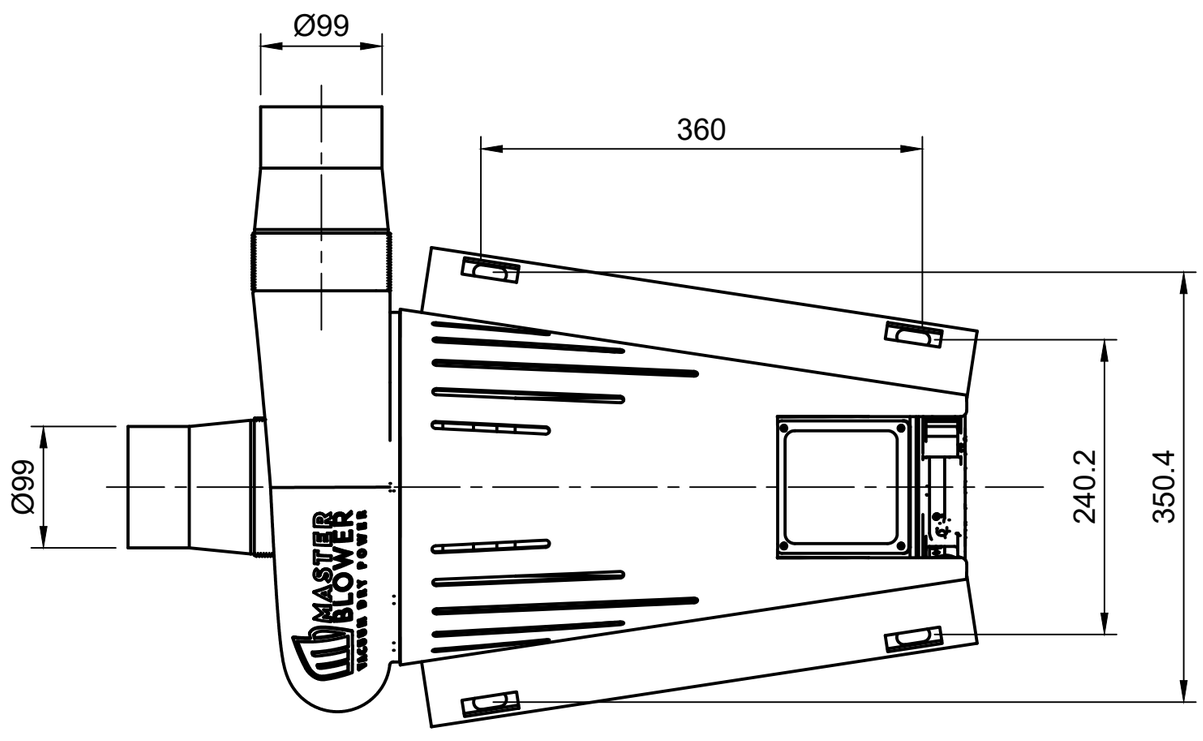
Ø99
360
Ø99
240.2
350.4
MASTER BLOWER

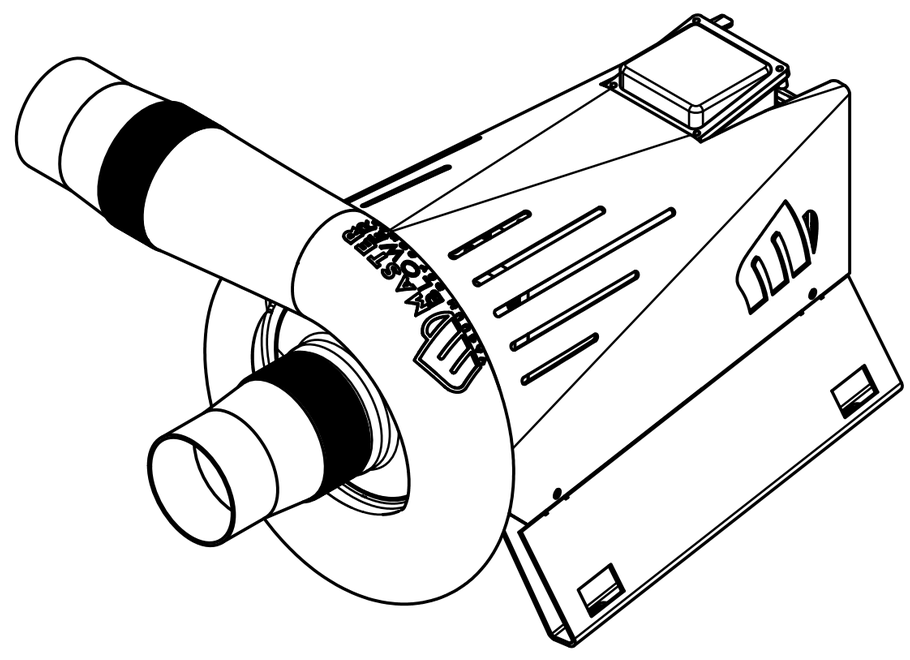
MASTER BLOWER